AMS Synchronous Motors
4- and 6-pole, 2-55 MW, 3-15 kV

Motors that deliver value

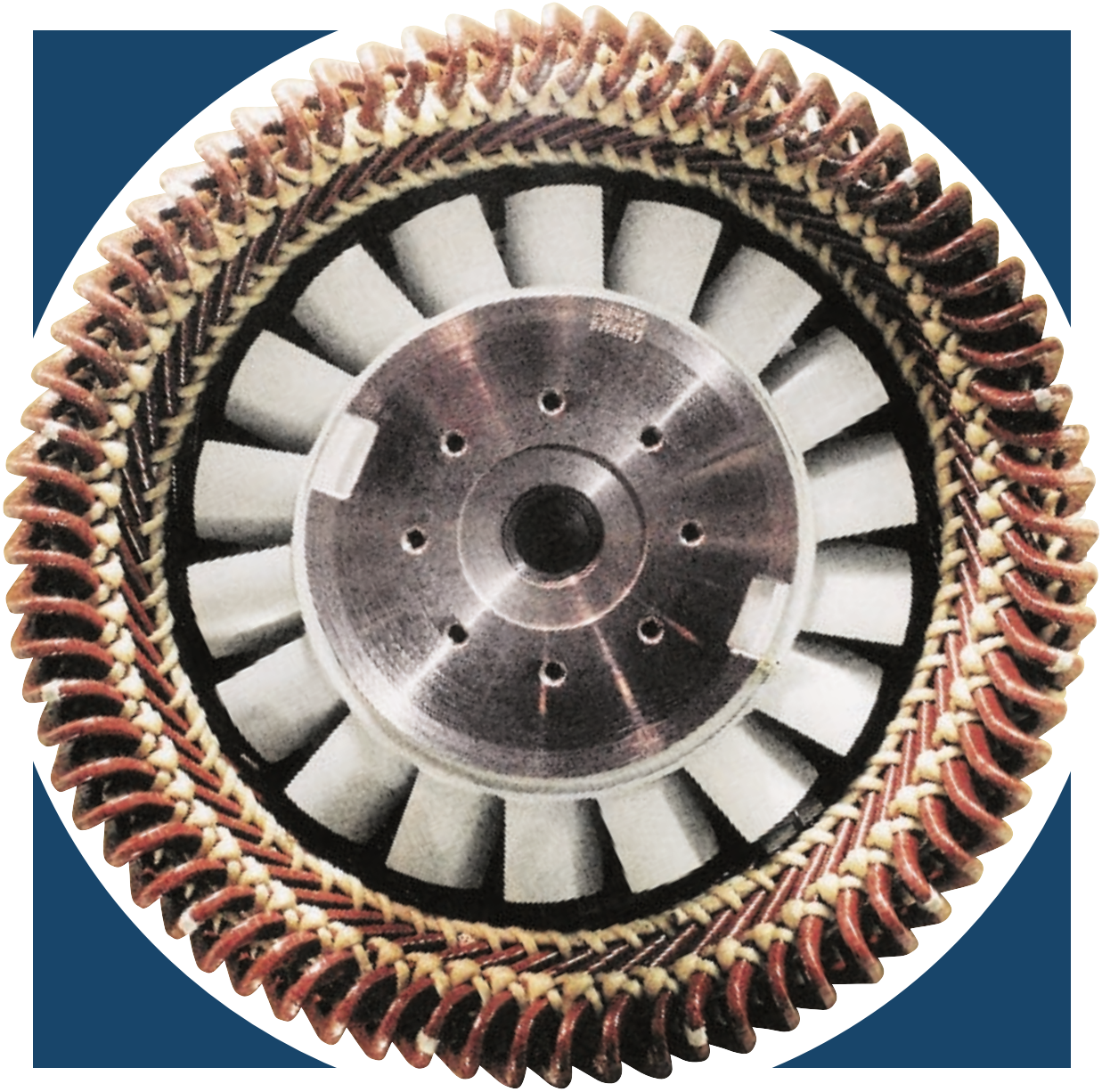

Brain Power.™

ABB

The power in our motors comes from people meeting. From contact with our customers and users. Then new requirements and new opportunities arise. From the joint efforts of our project teams, workshops and test facilities. Then ideas become reality and parts become a whole. It is always together that we create our motors.

Motors for people

Co-operation creates success

We manufacture motors. Develop, design and build. Those are the obvious and visible aspects of our work. But the real reasons for our success in the market are more difficult to define. They relate to a completely different process. A process where your expectations are fulfilled. Knowing how to listen, to communicate and to understand. To deliver real benefits.

Knowledge of your world

We base our business on experience. Whenever you contact us you are dealing with a partner who has supplied nearly 500 synchronous motors since 1990, for a range of applications all over the world. Applications where we have designed and built motors to suit each user's needs and values. We have listened, understood and delivered. Motors where, in each individual case, we provided the best solution.

Experience of the environment for motors

Today our motors are operating in many different environments. Some are working in violent storms on oil platforms, some in hazardous industrial areas and others in extremes of hot and cold. Regardless of where you are we can supply a motor for your application. It is through just such knowledge that we have become a world-leading supplier. This is not the sort of knowledge you can buy. This knowledge comes only from having been there.

In the middle of your reality.

Demand for larger compressor motors

The power required to drive compressors has increased considerably in recent years. Today it is not unusual with motors rated at 50 MW or more. Higher power is no problem for ABB.

These compressor motors are based on the same concepts as the generators we supply in the 70 MVA range.

An example of high power motors for compressors is a unit we supplied to Air Products for Baoshan Steel in China. The compressor is installed in the oxygen plant of the steelworks. It has very high inertia with high starting torque and requires a 31 MW motor. Autotransformer starting is used to keep voltage drop limitation.

Refiners for the strong and the weak

We recently delivered seven motors to drive refiners for a Canadian pulp & paper mill. The principal requirement was for high operating efficiency. The other main challenge was to be able to start on two very different power grids. One is very robust and the other is a weaker, local supply net. Voltage drop limitations were met for both power sources.

Values that mean more

Performance, availability, productivity and improved operating efficiency

Today it is not just the price and performance of a motor that determine how an investment decision is made. The decision is just as dependent on those other values important to the customer and the user.

In our experience one of the most significant values is confidence. You must feel sure that your new investment is based upon technology that is suitable for your requirements – of today and tomorrow. At the same time your solution should be well proven, supported by many strong references.

Confidence – the fundamental value

This confidence comes from the basic values of all those working in our organisation. The knowledge and experience of each and every member. The responsibility and quality consciousness of our skilled workforce. Initially this springs from an interest in technical matters. But it comes just as much from pride and from the desire to make every motor the best.

Creating value for customers

But we never use technology for technology's sake. We use technology to be able to give you the lowest total life cycle cost for each motor and values such as higher productivity, better operating efficiency and the correct level of control, to mention just a few.

And the earlier you contact us the greater is the opportunity for us to offer optimum design, a shorter delivery and for us to support you throughout the project. Also, from the outset you will have access to our expertise and experience for important questions of sizing and concerning the power supply.

Building motors is like building relationships. Relationships that simplify matters and shorten times. That develop and renew. It is through such relationships that we are always able to create new value for customers and users.

Creating values that provide more.

Life long responsibility
Through our customer co-operation arrangements we are able to continually upgrade installations to meet new requirements. We recently overhauled two motors supplied to Stora Enso in France in 1989.

The performance was improved substantially. The temperature margins were also increased which will further extend the life of the motors significantly.

The user’s requirements determine the motor’s design

Take a closer look at the possibilities

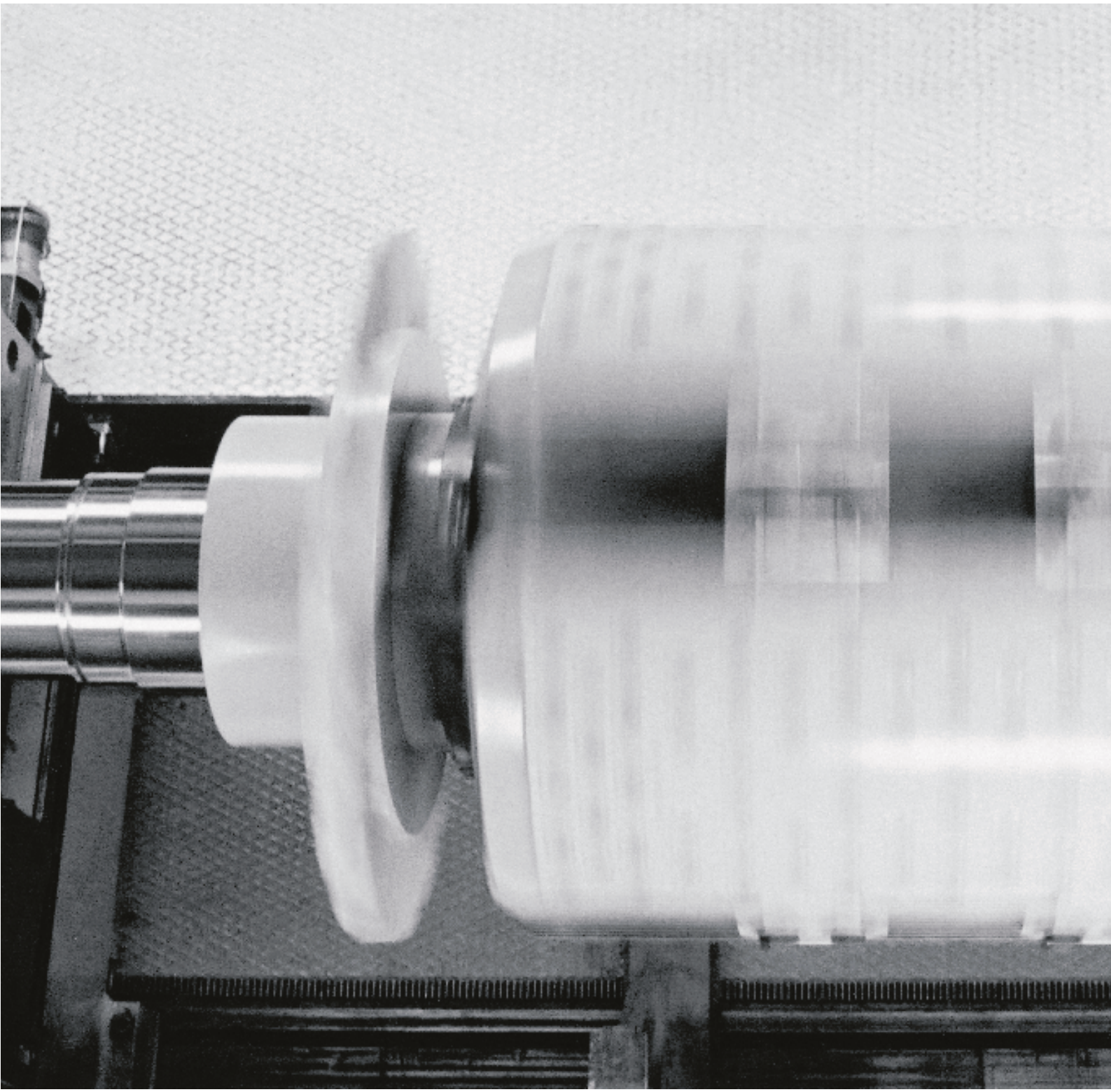

Our motor is a modular, quality-built unit with many highly developed components. Components that together make up the whole. Interesting? Open the page and take a closer look at your opportunities. After all, it is your requirements that determine just how the motor will be configured.

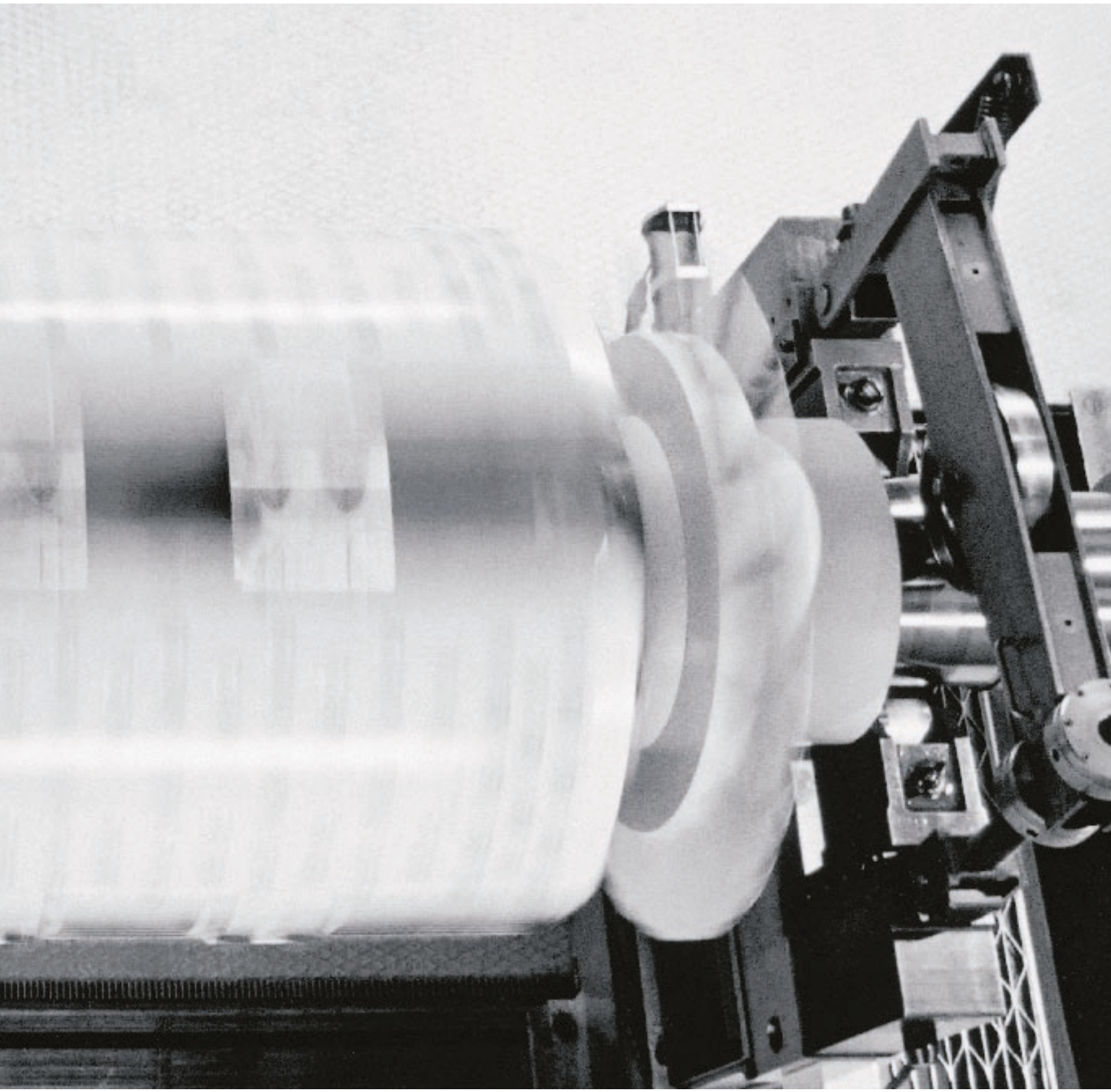

Quality in every aspect

ABB is the world's leading supplier of synchronous motors for compressors and refiners. The motors are also used to drive blowers, fans, pumps, extruders and in rolling mills.

Continuous development means modern products

All of our motors have been developed as a standard range of modular units offering great flexibility to ensure that the right motor can be selected for each application.

We endeavour to introduce each improvement resulting from innovation, from new materials or from new manufacturing methods quickly so that customers can enjoy the benefits as soon as possible. We can also introduce changes in ways to ensure that they can be fitted to motors supplied earlier so that existing users can also share the benefits.

After long periods of continuous development it is sometimes necessary to make more radical changes and, in the end of the 1990s we decided to introduce a new range of synchronous motors which would take advantage of all previous development and provide a platform for the future. It was first used for the smaller models but now it is our standard motor for the whole range.

The concept facilitates the rapid implementation of change. Also, we apply the same concept to synchronous motors and generators which is of great benefit to both.

And modern factories

The focus on the development of 4-pole and 6-pole synchronous motors and generators has been highly successful and has enabled us to build one of the world's largest and most modern factories for this class of work.

The Rotor

Solid pole shoes absorb the heat generated during start. Contributing to excellent starting characteristics, high starting torque and low starting current.

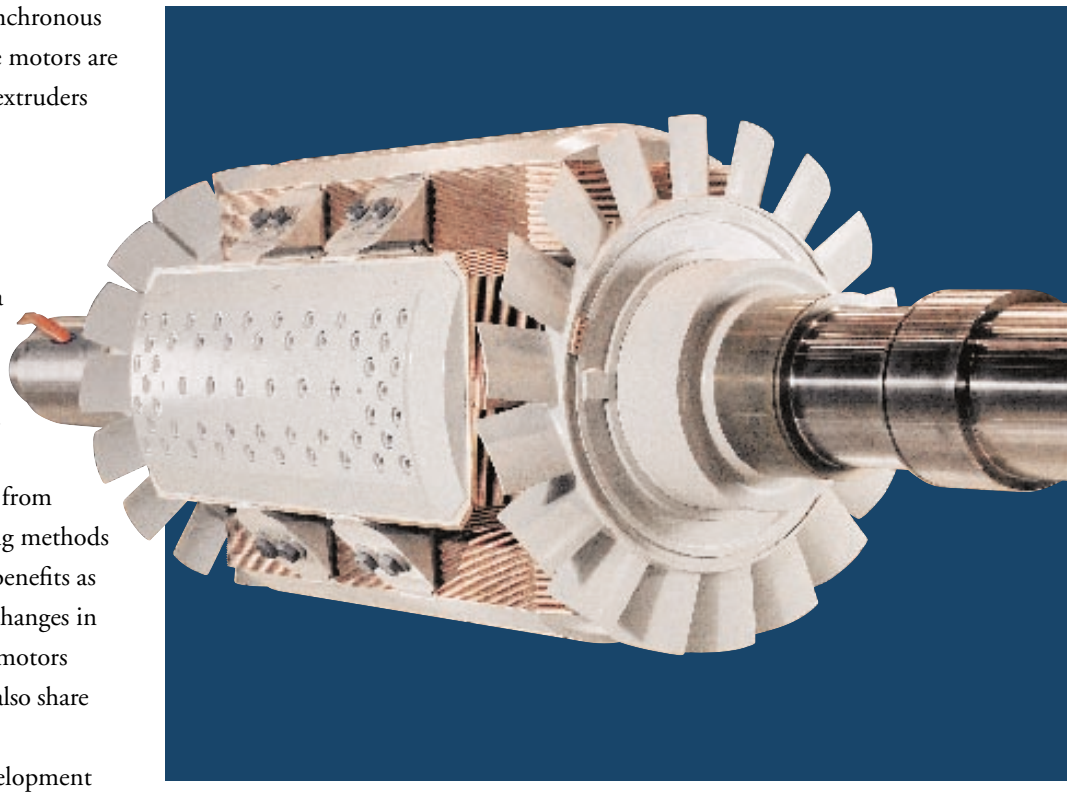

Reliable operation and long life due to large cooling surfaces and effective flow of cooling air. This also gives low uniform rotor temperature. Class H insulation of the coils gives extra thermal margins.

The stiff rotor and minimum distance between bearings ensure that the operating speed is below the first critical speed, thus giving low vibrations.

Over-speed tests are performed as standard. The complete rotor is balanced at operating speed.

Options

– The shaft extension can be flanged to match the driven machinery.

– Shaft for double end drive.

The Stator

The modular design allows optimisation of performance to meet specific application requirements.

High-grade, low-loss electrical steel increases efficiency and reduces operating costs.

The stiff frame transmits all forces directly to the foundations.

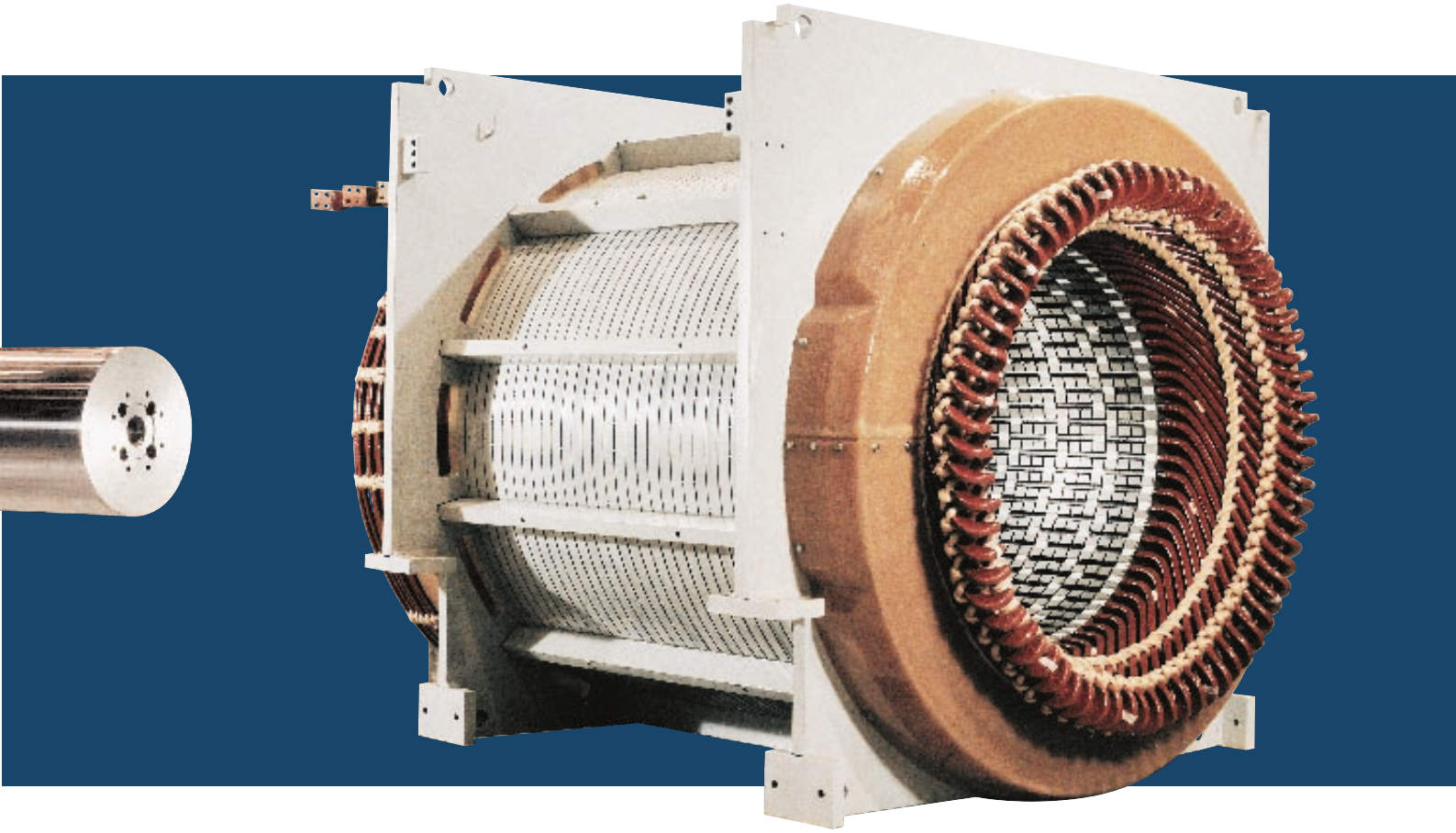

The insulation system gives reliability and long life. The windings are insulated with Mica based tape. When the windings are in place, the complete stator is impregnated in a vacuum pressure impregnation (VPI) process. The windings are of insulation class F, which gives good thermal margins.

Well developed and proven methods for locking coils into slots and bracing coil ends ensure long term reliability.

The Exciter-rectifier

Simple but highly developed design having few components and well adapted protection functions offers high reliability and easy access for maintenance.

The compact, brushless exciter unit is mounted on the rotor shaft outboard of the bearings. No independent support or alignment is required.

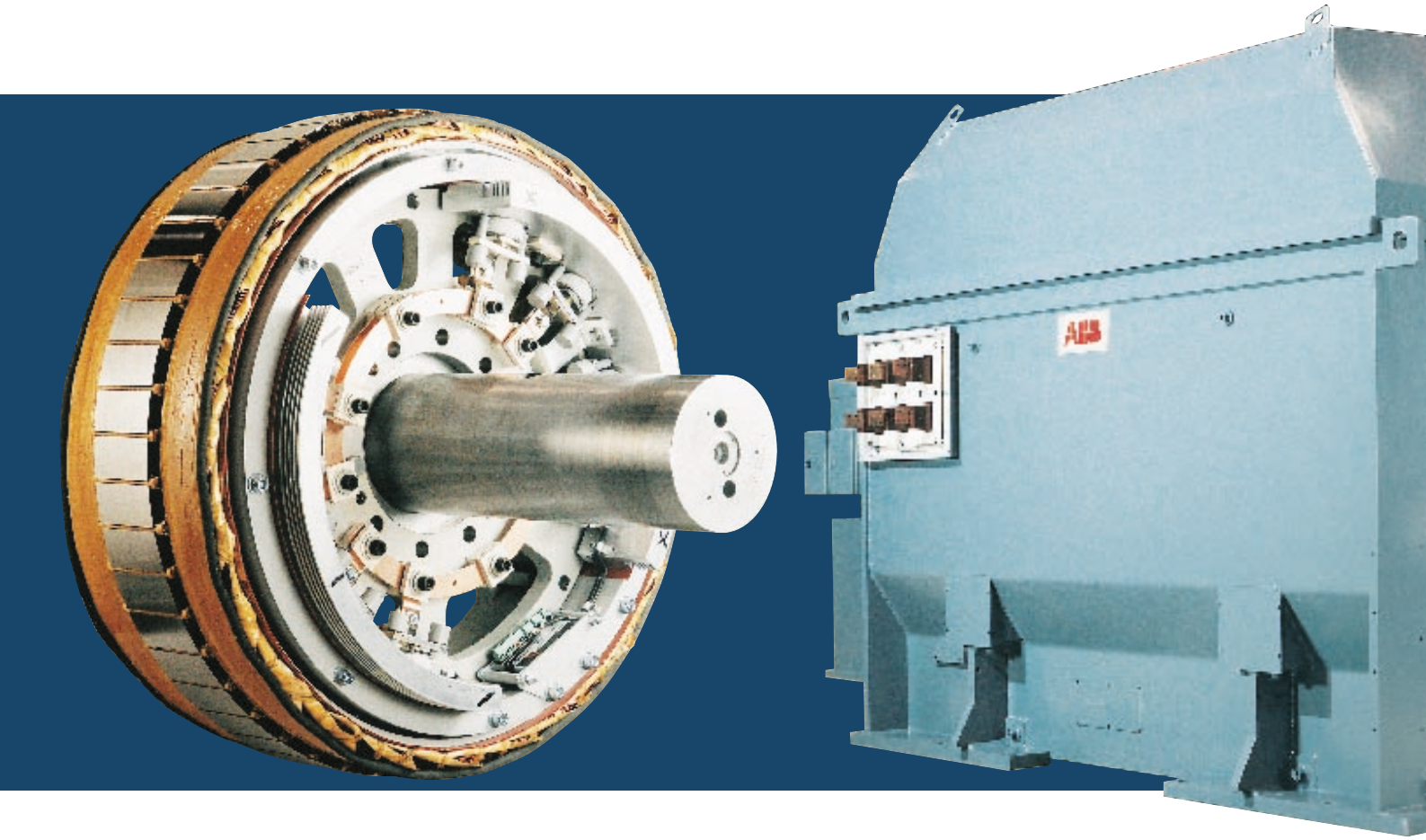

Improved system performance due to high level of field forcing. This is important when faults in the supply network arise and to increase the production of reactive power.

Bearing housing design permits easy access for inspection and maintenance. Bearing housings are insulated from the frame to eliminate circulating currents in the shaft. The shafts can be earthed. Bearings are sealed against oil leakage with labyrinth seals.

Sleeve bearings are designed to be insensitive to misalignment and to permit large axial play.

Independent lubrication system gives high reliability. Oil rings or oil reservoir ensures lubrication during emergency rundown. Hydrostatic jacking oil systems are available for applications operating at low speed.

The Frame

Great stability of the complete motor. Dynamic and static stresses are transferred directly to the foundation contributing to the great performance.

Shipment of fully tested motor. Only the terminal box, and in some cases the heat exchanger, need to be removed prior to shipment.

Motors smaller than 20 MW can be installed sunk down in the foundations.

Small dimensions and low weight simplify preparation of foundation and the installation. Despite its small size, the motor is easily accessible for maintenance.

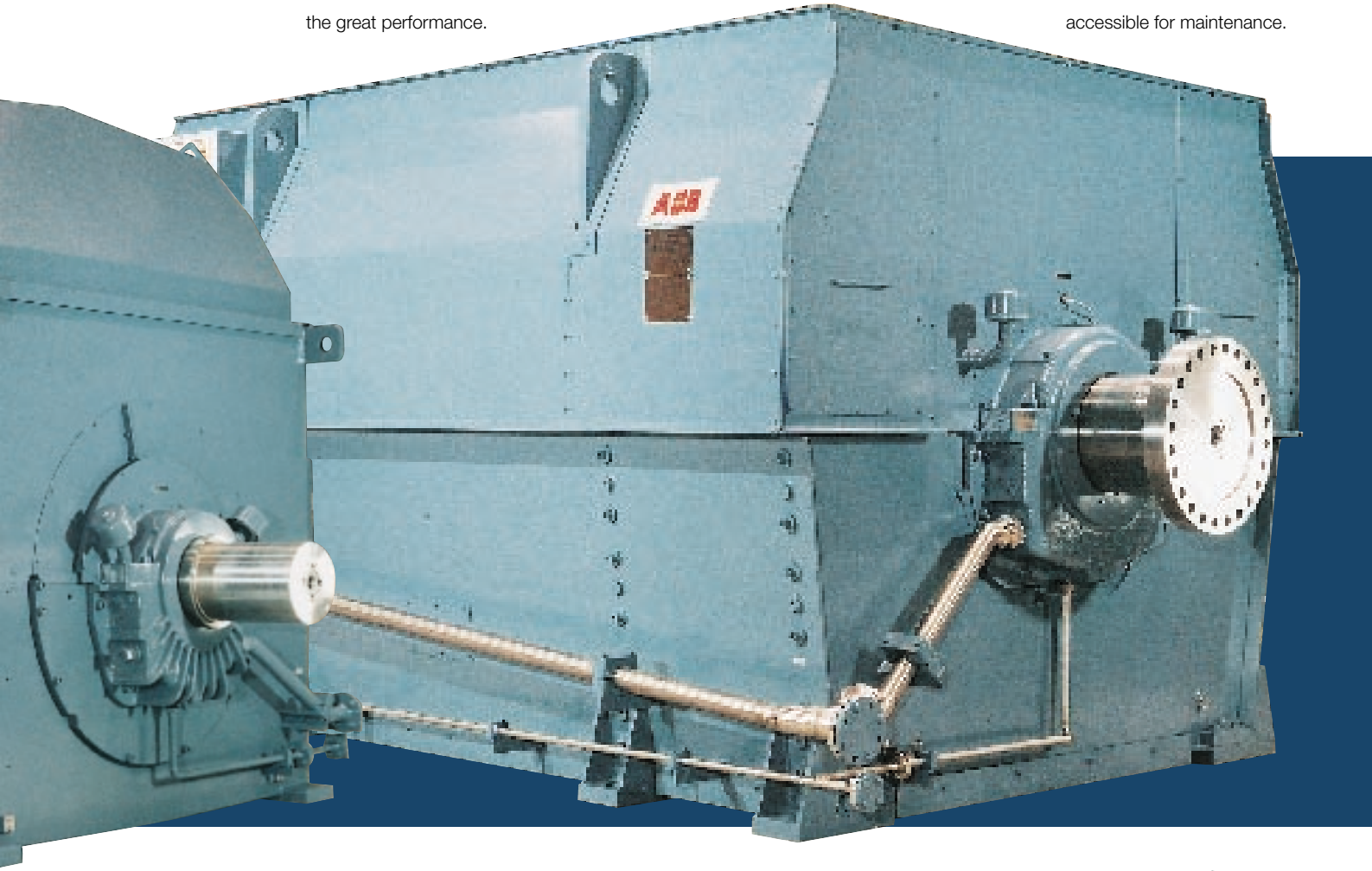

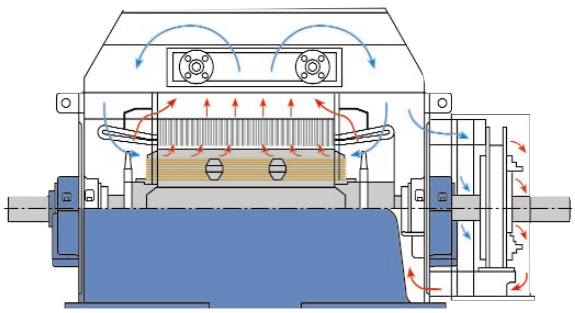

Cooling form IC8A1W7 for motors below 20 MW.

A wide range of cooling forms allows an optimum choice for operating and environmental conditions. Irrespective of the cooling form, the system provides uniform cooling of the complete motor. All water connections are positioned outside the frame.

Options for water/air heat exchangers.

– Systems with double water/air heat exchangers can be designed for full load with one of the heat exchangers out of service.

– Heat exchangers with double tubes.

– Heat exchangers of different materials, e.g. CuNi, stainless steel or titanium.

More than just a motor

We see the motor as a part of the whole

In ABB we have considerable experience in fitting together the motor system to build an industrial plant. We also have solutions for converting information from the drive system into an efficient and smooth supervisory system.

Always a part of something bigger

The technology in our synchronous motors means constant high efficiency, good starting characteristics, the possibility to develop a high reactive power and excellent control of the motor.

But the motor management is also part of a system. The motor must fit smoothly into the application, to the supply net, to the monitoring system and to the plant's overall information system.

Integration

We have a wide, flexible range of systems for collecting and transmitting information from the motor for protection and for supervision. A concept that can easily be fitted to your needs and the special requirements of your plant.

Tailor-made solutions

As complexity increases so does the scope and scale of each order. That places extra demands on the capacity of the supplier. The competence required for your project, regardless of size, is available within ABB. The competence and capacity to tailor solutions that cover everything from supplying the motor to design of the complete motor system.

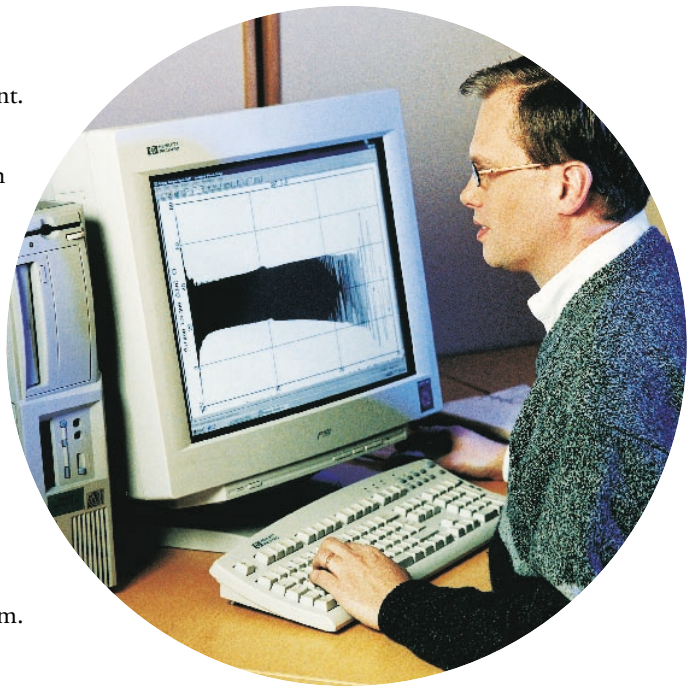

Accurate rating
We always make an accurate simulation of the plant at the proposal stage. Using our advanced simulation program we are able to make detailed calculations at any stage in the life of the machine.

Flexible deliveries

ABB's supply involves more than just the motor. The terminal box, motor control panel and starting equipment are normally included.

The supply can also include the lubrication system, an intermediate frame for mechanical adaptation and base-frame for motor and gearbox.

Within our modular system it is also possible to adapt new motors to old pedestal bearing design.

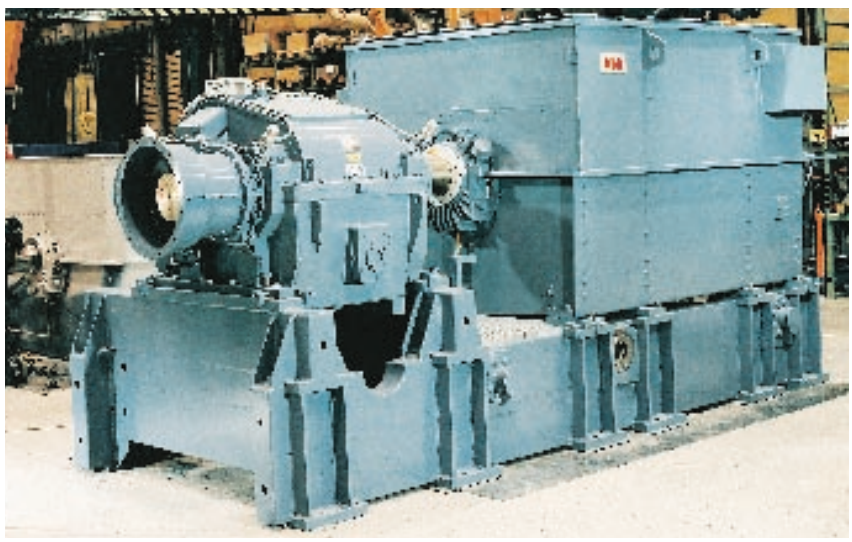

Starting

For most applications ABB can supply motors which develop sufficient torque for smooth starting and acceleration with the starting current limited to 250–300 % of the rated current. If this starting current is likely to cause unacceptable line voltage drops then alternative starting methods can be used.

Protection

ABB provides very comprehensive systems to minimise the risk of interruptions to operation of the plant and to achieve a long service life for the motor and associated equipment.

Starting methods

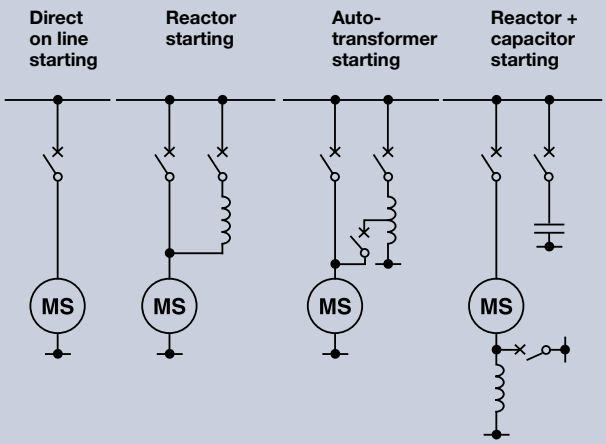

The diagram shows the most common methods for starting. In special cases starting can utilise frequency converters or an Pony starting motor.

Recommended protections

Other signals

Normally connected direct to the common control system of the application.

- Temperature cooling air
- Temperature stator windings
- Temperature bearings
- Vibration bearings 1)
- Temperature/Flow cooling water 1)
- Temperature/Flow lubricating oil 1)

1) Not always included in the motor supply.

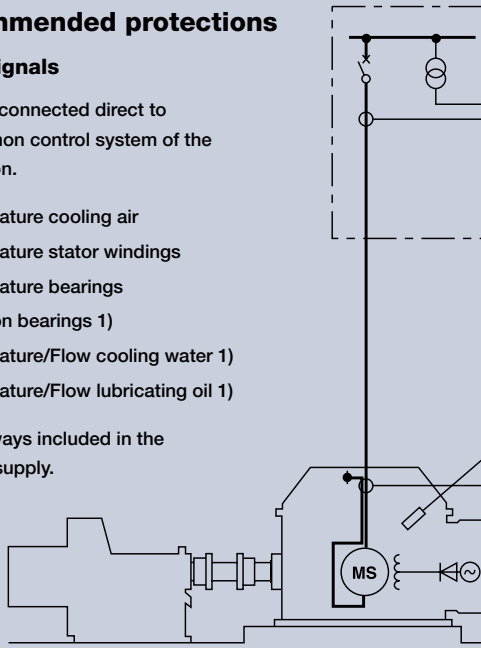

Optimised starting sequence

For every application computer based calculations are made to optimise the motor design and the method of starting. The results of these calculations are given in tabular and graphic formats and are part of the technical specification sent with each proposal.

As an option ABB can undertake a detailed analysis and simulation.

These investigations can include a study of the effects on the whole system of transient electrical and mechanical events.

Source and location

Normal motor protection systems and the protection required to ensure rapid action of the main circuit breakers are usually included in the switchgear contractor's supply. Protection required for synchronous motors and application specific protection is supplied by ABB and is housed in the motor control panel.

Advanced options

In some cases it can be advantageous to fit additional protection including telemetrics. For example, direct measurement of the rotor temperature will permit a rapid sequence of starts without the risk of damage to the motor thus helping to maintain high productivity. Similarly it may be worthwhile to monitor earth faults in the rotor or the rotor current.

Excitation

Synchronous motors require control of excitation current in the rotor. ABB's brushless, rectifier based excitation system offers control of rotor taking full benefit from the advantages of synchronous motors.

Motor Control Panel

The motor control panel can be supplied in a variety of basic formats and houses the excitation equipment, the protection system and the logic functions for starting.

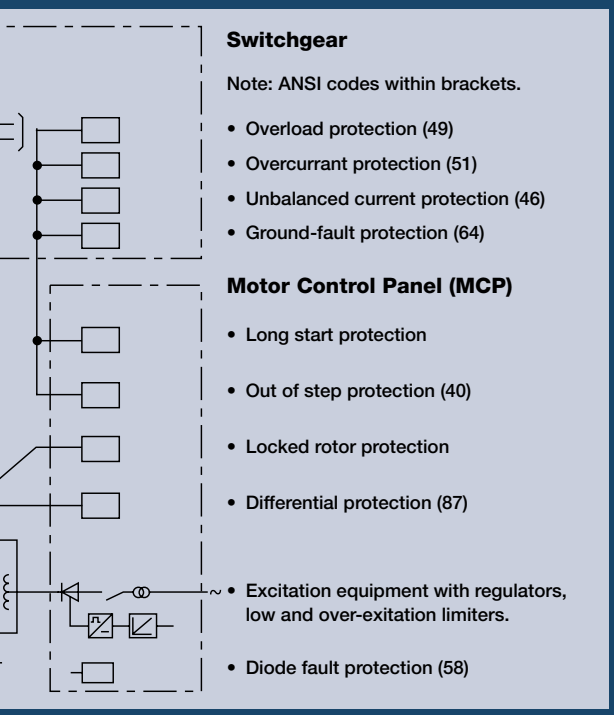

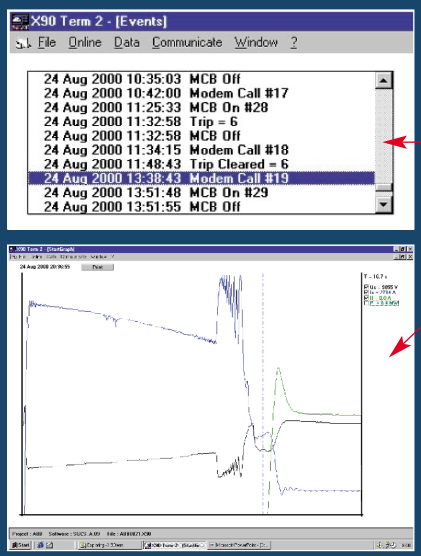

The advantages of synchronous motors

A significant advantage of synchronous motors is the facility to select the most suitable operating conditions – constant field current, constant reactive power or control of the reactive power in the feeding system etc. The ability to control the reactive power can significantly reduce the total cost of operating the plant.

Integration with plantwide systems

The motor control panel can, as an option, be adapted for immediate integration into a superior management and supervisory system. It is also possible to arrange communication via a modem which greatly facilitates support from remote resources.

Operator's control panel

An operator's panel where information is presented in alphanumeric format is fitted into the front of the motor control panel. Selection and display of the required information can be programmed on a PC. It is also possible to have a graphic display for e.g. event recording.

Requirements for all the components in a system to work smoothly together have increased in step with requirements for higher levels of cost-effective production.
In today's industrial world there is a much sharper focus on total concepts and total solutions.

Simplicity throughout

A concept full of customer value

An overall objective for us is to make life simpler for our customers. Every stage must be easy, from selection of the motor and how it will be integrated through to installation and commissioning. And, of course, for maintenance, servicing and the provision of spare parts.

Closer relations reduce costs

Frequent contact between the buyer, supplier and the user is clearly an important factor in achieving a good exchange of information and maintaining good communications. Through various forms of partner agreement we can work together to adapt the product interface to simplify logistics and reduce delivery times and, at the same time, support the customer throughout the project phase.

Customised designs

Within the frame of an agreement the co-operation often grows much deeper. This has, for example, involved our design and development engineers working very closely with the customer and end-user to develop jointly an optimised total solution.

A global network

An important prerequisite for close co-operation with customers is a local presence. We are present in most countries of the world and you have access to our complete product range and all our expertise by contacting our nearest sales office. A presentation of our marketing facilities is even closer – it can be found at www.abb.com. Welcome to ABB.

Industry served	
Fiber Board	Refiners (MDF)
Industrial Gases	Compressors
Metals	Blowers, Compressors, Fans, Rod and Bar Mills, Wire and Rod Mills
Mining	Compressors and Fans
Petroleum	Compressors, Expanders and Extruders
Pulp and Paper	Refiners
Utilities	Expanders, Fans and Pumps
Others	Compressors, Fans and Pumps

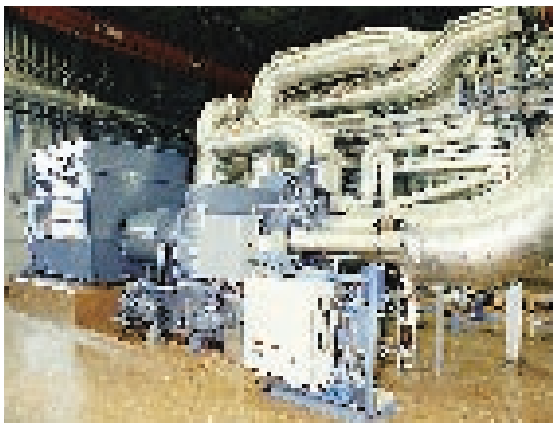

Tested to ensure quality

We perform a comprehensive test on every motor before it is dispatched to the customer. This test is part of the quality assurance procedure which is followed closely for every delivery. Evidence of the test, in the form of test reports, is handed to the customer on completion of the test.

ABB 4-pole and 6-pole synchronous motors and generators are sold all over the world by ABB sales companies. They are supported from Sweden.

The development, design and production facilities are concentrated at Västerås in Sweden. This concentration helps to ensure that the most modern production resources are used to maintain high quality and low costs – to reinforce ABB's leading position in this field.

Long-term profitable operation of these machines requires reliable performance from every component. To achieve this ABB offers services that extend well beyond the warranty period. These services include preventive and corrective servicing and up-grading to improve performance and extend the life; also the supply of spare parts and support.

Servicing is undertaken in conjunction with specialist service companies from within and outside the ABB group, thus providing global cover.

ABB can be your partner from the very beginning through to the end of the motor's life cycle.

ABB Motors AB
Machines division
SE-721 70 Västerås, Sweden
Tel: +46 21 32 90 00
Fax: +46 21 32 95 10
www.abb.com

3BSM 006 539 R001 January 2001
Care Of: Printed in Sweden by Westerås Mediatryck, Västerås.